1. Introduction & Purpose

Team SPCE Robocon has been participating in Robocon India since 2010, securing 13th rank at Robocon India 2018, completing the task in 1 minute 29 seconds.
Purpose of this report is to highlight the fabrication process of two robots in compliance with guidelines mentioned in the rule book and design goals set by the team for each robot.
We have utilised the following software to develop a technically sound design: CATIA V5®, ADAMS®, FluidSIM®, ANSYS®, EAGLE

2. Design of Manual Robot

2.1 Design Goals

2.1.1. Robust, compact, can sustain finite vibrations
2.1.2. High speed & accuracy in motion using encoders
2.1.3. Effortless controlling & easy debugging
2.1.4. Adjustability according to MR2 & Arena

2.2 Chassis Design ($l \times b \times h$: 600×600×330mm)

AISI 1018 (Mild Steel: MS) square sections (0.5”×0.5”×2mm) were welded using TIG welding. MS was selected over Aluminium due to greater flexural strength. Medium Density Fibreboard (MDF) fixtures (*Fig 2.1*) (manufactured via laser-cutting) were designed to ensure that chassis rods were welded in same plane and there is minimum deformation of rods while welding. Chassis links were positioned in compliance with maximum deformation (*0.089 mm – Fig 2.2*) data, as confirmed on ANSYS®. Dimensions of chassis were optimised keeping travel through forest in mind, making it as compact as possible.

Safety Feature: Rollers are attached to the sides of chassis to ensure minimal damage to robot if it strikes the walls of arena. Emergency switch is provided to cut off supply to motors in case of a mis happening.

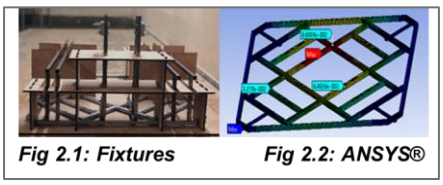

Fig 2.1: Fixtures *Fig 2.2: ANSYS®*

2.3 Drive, Sensors & Algorithm

Drive: (*Fig 2.3*)

DC Geared Planetary motors of 750 RPM are used to drive four omni wheel (Ø100 mm) giving us required linear velocity for holonomic motion. Load is distributed evenly amongst four motors that are coupled to wheels using a two piece coupler. A unibody aluminium coupler fails due to abrasive wear if coupled to motor shaft and thus motor couplers are made in two parts. D-slotted MS coupler press fits (Ø10H7p6) in D-shaped motor shaft and aluminium flange supports the wheel. This reduces overall weight and provides adequate support to both wheel and motor. Three cast nylon mounts (manufactured via waterjet machining & milling) are used to avoid cantilever loading on motor mounts.

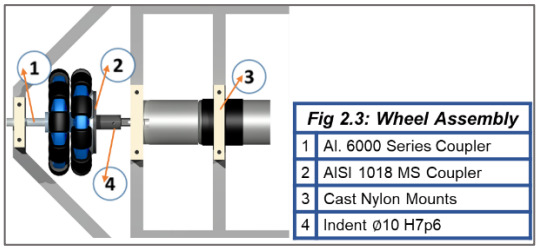

Fig 2.3: Wheel Assembly

1	Al. 6000 Series Coupler
2	AISI 1018 MS Coupler
3	Cast Nylon Mounts
4	Indent Ø10 H7p6

Sensors: (*Fig 2.4*)

Three rotary encoders (360 PPR) positioned at the centre of the chassis are used for autonomous locomotion - two are used to record coordinates and one is used to compute error during straight travel. Self-made encoder mounts have springs to ensure omni wheels (Ø50 mm) coupled to encoder shaft always touch the ground. Line following was rejected as a larger path with multiple turns had to be followed.

Limit switches are used in Shagai Pick Up mechanism to restrict the motion of pick up arm and hold Shagai accurately.

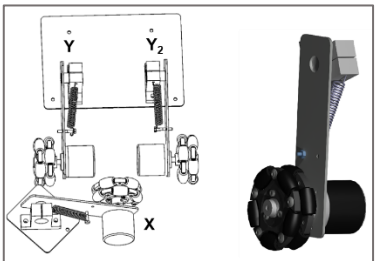

Fig 2.4: Encoder Mounting

Algorithm: (*Fig 2.5a, Fig 2.5b*)

Two microcontrollers, ARDUINO UNO & ARDUINO DUE are used primarily because DUE does not contain EEPROM (Electrically Erasable Programmable Read-Only Memory), implying that the reference readings are lost once DUE resets or when program is re-uploaded

Readings obtained by moving the joystick of PS4 controller are converted into velocity vectors thus resulting in a controlled holonomic drive (analogue

resolution is provided). This is used for manual control of robot. For automatic control, encoders are employed in the following manner.

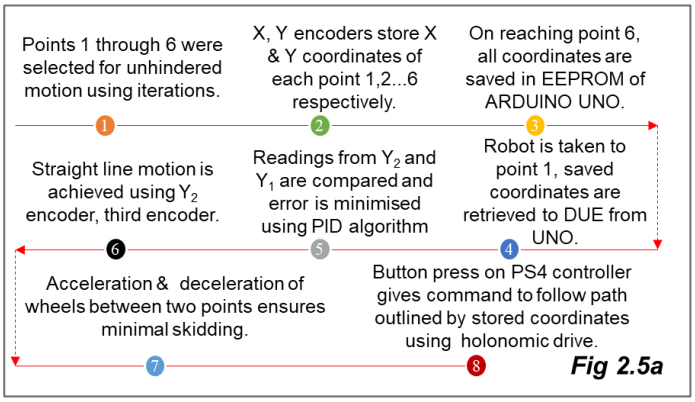

Fig 2.5a

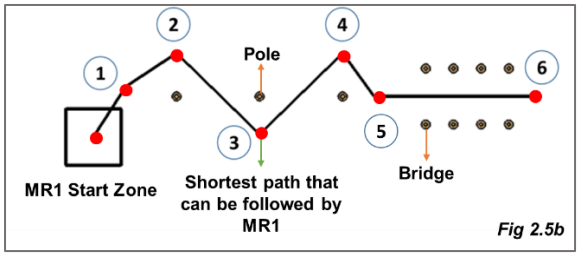

Fig 2.5b

1.4 Shagai Pick Up & Throwing

Pick Up: (*Fig 2.6*)

30 RPM DC Geared Johnson Motor is coupled to a shaft using helical gears. Gears with 2:1 gear ratio are used to prevent failure of motor shaft under excessive loading. Carbon Fibre parts (greater strength to weight ratio) were used to reduce overall weight of mechanism. Janatics Piston (bore ø20 mm, stroke length 25 mm) opens and closes an arm that grips the Shagai. This Pick Up Mechanism has one degree of freedom and is thus simplest to control.

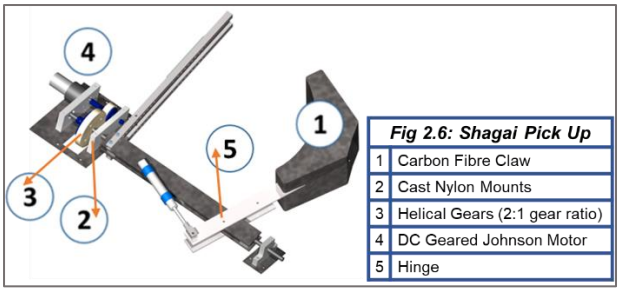

Fig 2.6: Shagai Pick Up

1	Carbon Fibre Claw
2	Cast Nylon Mounts
3	Helical Gears (2:1 gear ratio)
4	DC Geared Johnson Motor
5	Hinge

Throwing: (*Fig 2.7*)

Simulation on ADAMS® was used to determine optimum angle, position and height of mechanism. Two pistons of same specifications (Janatics, bore ø25 mm, stroke length 100 mm) are used to increase the magnitude of impact force on Shagai thus obtaining the required projectile. Bearings at hinge where piston is mounted are selected such that they can sustain piston force during throwing action.

Pneumatic circuits were designed in FluidSIM®. (*Fig 2.8*)

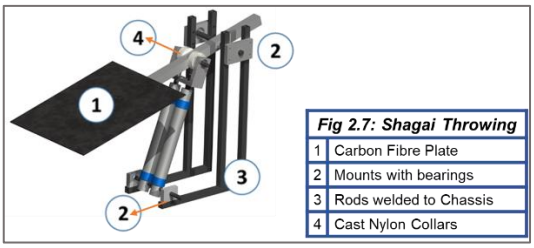

Fig 2.7: Shagai Throwing

1	Carbon Fibre Plate
2	Mounts with bearings
3	Rods welded to Chassis
4	Cast Nylon Collars

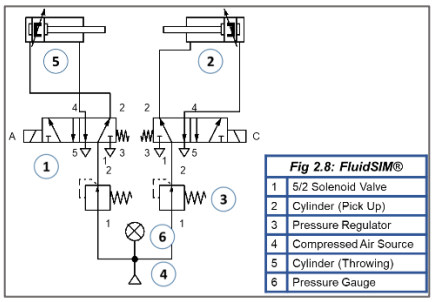

Fig 2.8: FluidSIM®

1	5/2 Solenoid Valve
2	Cylinder (Pick Up)
3	Pressure Regulator
4	Compressed Air Source
5	Cylinder (Throwing)
6	Pressure Gauge

1.5 Gerege Transfer (*Fig 2.9*)

Piston and cylinder arrangement (Janatics, bore ø16 mm, stroke length 200 mm) is used to extend Gerege to MR2. Servo motor rotates a MDF plate that presses and holds the Gerege in position. Threaded rods (Aluminium) and tapped collars (Cast Nylon) are used to elevate the mechanism and provide adjustability in mounting.

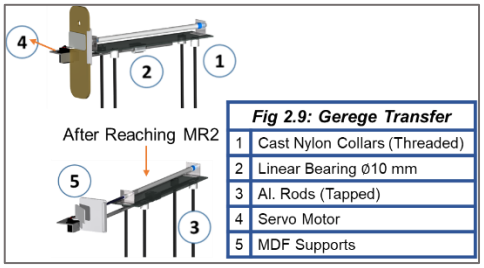

Fig 2.9: Gerege Transfer

1	Cast Nylon Collars (Threaded)
2	Linear Bearing ø10 mm
3	Al. Rods (Tapped)
4	Servo Motor
5	MDF Supports

1.6 Power & Control (*Fig 2.10*)

Fig 2.10: Power & Control Flow Diagram

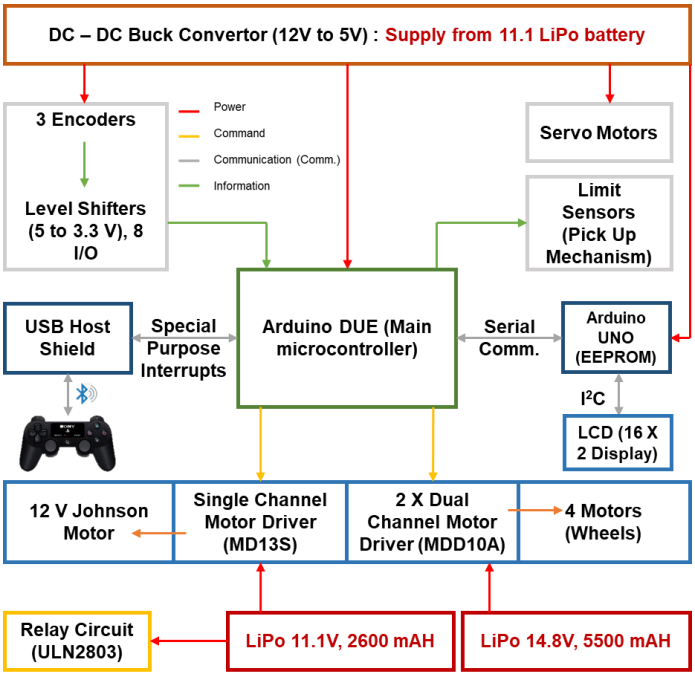

3. Design of Autonomous Robot

3.1 Design Goals

3.1.1. Static and dynamic stability
3.1.2. Different gaits can be adopted for locomotion
3.1.3. Light weight assembly

3.2 Chassis ($l \times b$: 825×329 mm)

Aluminium (6000 Series) square sections (0.5”×0.5”×2mm) are used for chassis members. Length of chassis is greater than its breadth to reduce moment of inertia about its longitudinal axis passing through the centre of gravity. Cross members were positioned using deformation data (*0.064 mm*) from ANSYS®. They are bolted together rather than welded to allow for design iterations. (*Fig 3.1*)

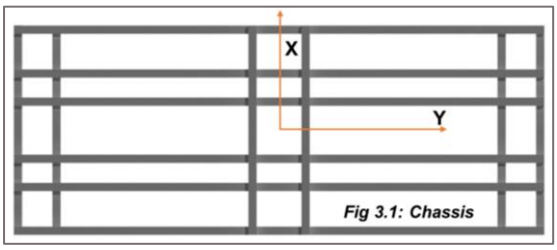

Fig 3.1: Chassis

Leg Design: (*Fig 3.2a*, *Fig 3.2b*)

Length of links were calculated according to the torque requirements and the torque supplied by motor. Lengths were validated through simulation on ADAMS®. For ease in assembly and optimization of design for light weight, aluminium plates (3 mm thick) are used. Shear and crushing calculations suggested that cast nylon motor mounts can be preferred over aluminium mounts, thus achieving our goal of a light weight assembly.

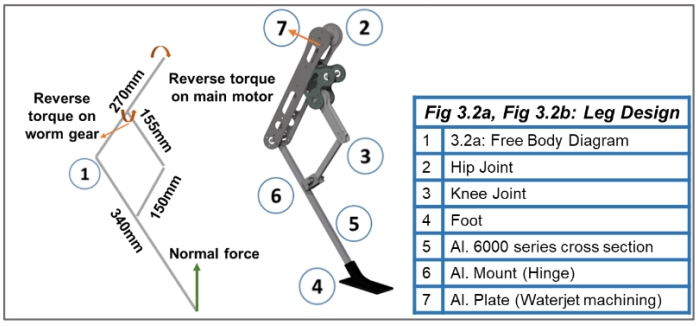

Fig 3.2a, Fig 3.2b: Leg Design	
1	3.2a: Free Body Diagram
2	Hip Joint
3	Knee Joint
4	Foot
5	Al. 6000 series cross section
6	Al. Mount (Hinge)
7	Al. Plate (Waterjet machining)

3.3 Drive (Per Leg) : D.O.F. = 2

The leg consists of one 100 RPM and one 1000 RPM planetary DC Geared motor for actuating the hip joint and knee joint respectively. Two encoders of same specifications (360 PPR) are coupled with these motors for precise movement with real time feedback (*Fig 3.3*).

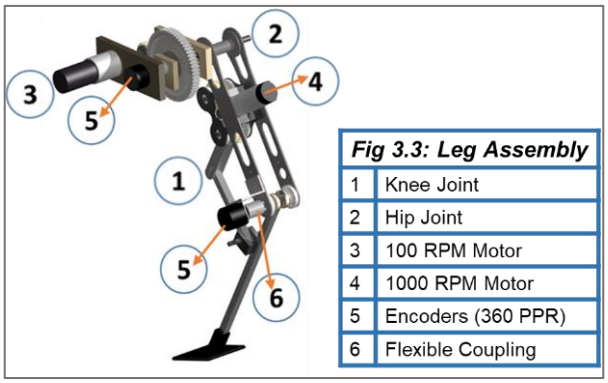

Fig 3.3: Leg Assembly	
1	Knee Joint
2	Hip Joint
3	100 RPM Motor
4	1000 RPM Motor
5	Encoders (360 PPR)
6	Flexible Coupling

Knee Joint: (*Fig 3.4*)

An assembly of worm and worm wheel ($z_1/z_2/q/m_x$::1/32/11/1.5) is used to drive the knee joint. The design is such that worm can easily turn the worm wheel, but wheel cannot turn the worm. High torque requirement at the knee is sufficiently supplied by this mechanism. Additionally, this assembly decreases and effectively controls motor speed.

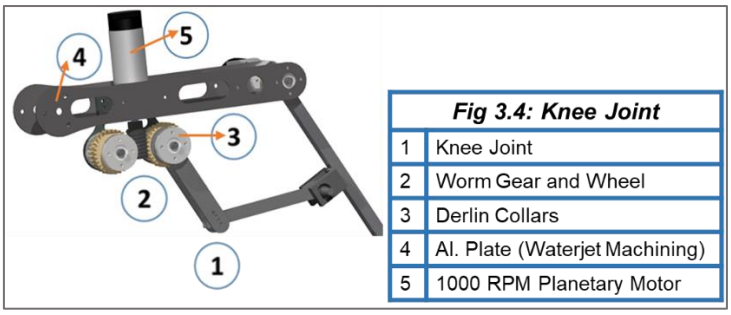

Fig 3.4: Knee Joint	
1	Knee Joint
2	Worm Gear and Wheel
3	Derlin Collars
4	Al. Plate (Waterjet Machining)
5	1000 RPM Planetary Motor

Hip Joint: (*Fig 3.5*)

To obtain the desired linear velocity of MR2, a gear assembly (Gear Ratio 4:1) is coupled to 100 RPM planetary motor. This increases the torque supplied, ensuring that MR2 is always statically stable and is capable of standing on three legs. Flexible couplers are used to pair encoder’s shaft with gear assembly to account for dimensional error arising due to manufacturing of mounts.

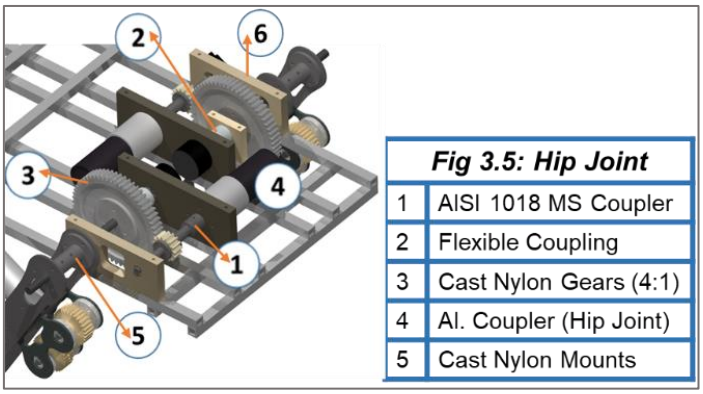

Fig 3.5: Hip Joint	
1	AISI 1018 MS Coupler
2	Flexible Coupling
3	Cast Nylon Gears (4:1)
4	Al. Coupler (Hip Joint)
5	Cast Nylon Mounts

3.4 Locomotion & Sensors

Algorithm (each leg):

The motion of a single leg is categorized into two phases: swing (while in air) & support (while in contact with the ground).

When in support phase, the leg rotates backwards about the hip joint. This motion effectively pushes the chassis forward providing linear velocity to the robot. During swing phase, leg is lifted due to rotation about the knee joint (rotating the worm gear) while simultaneously the leg assembly moves backwards due to rotation about the hip joint. The leg then swings forward about the hip joint while the worm assembly drives the foot towards the ground. This completes one cycle of locomotion.

The motion depends on encoders placed at the hip joints and knee joints. There are two walking patterns, or gaits, that the quadruped can use for locomotion given as follows:

1. **Creep Gait:** It is a statically stable gait. Legs are actuated one at a time in the order 3-1-4-2, as shown in *Fig 3.6*. When one leg moves forward in swing phase, the other three are in support phase, essentially pushing the quadruped forward. To keep the quadruped stable would mean to keep the centre of gravity inside the stability triangle formed by the three feet on ground. Creep gait can be modified to cross obstacles by varying angles at the knee and hip joint.
2. **Trot Gait:** In this, two diagonal legs are in swing and the other two are in support phase. Trot gait is faster than creep and has dynamic stability since the centre of mass is on the line between the two grounded feet.

The strategy is to use trot gait when MR2 is simply walking and rapidly adopt creep gait when it has to overcome an obstacle, ensuring its efficiency. Turning of MR2 is achieved by reducing the step-size of the direction in which it is to be turned.

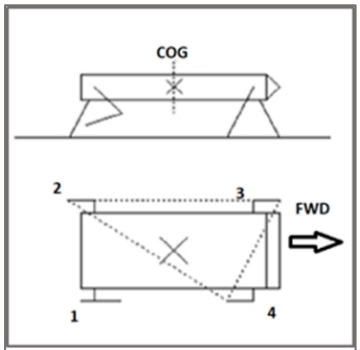

Fig 3.6: Gait Types

Sensors:

Camera controlled by Raspberry Pi is used for obstacle detection (Tussock & Mountain) and line following using image processing.

Ultrasonic sensors are used to determine distance from the sand dune.

Infrared proximity sensors are used to sense the Gerege transfer, start locomotion and to initiate mountain climbing motion.

Limit switch is used to stop the DC motor to ensure vertical position of Gerege during Uukhai.

3.5 Gerege Transfer (*Fig 3.7*)

DC Geared Johnson motor, 35 RPM, is used to rotate a MDF pocket in which the Gerege is placed by MR1. MS coupler (coupled to motor shaft using a cross-pin) provides the necessary coupling between motor shaft and pocket. Dimensions of mechanism are selected such that on rotating the pocket by 90° (ensured by limit switch) top of the Gerege is at 1000 mm from ground. Mini Servo motors are employed to rotate MDF arms that lock the Gerege in its position on MR2.

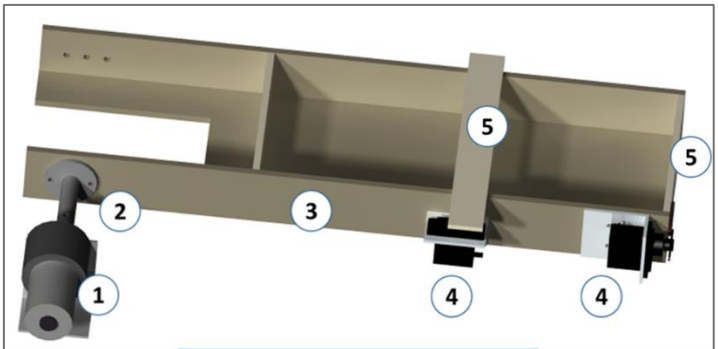

Fig 3.7: Gerege Transfer	
1	30 RPM DC Johnson Motor
2	AISI 1018 MS Coupler
3	MDF Pocket
4	Mini Servo Motor
5	MDF Stoppers

3.6 Power & Control (*Fig 3.8*)

Fig 3.8: Power & Control Flow Diagram

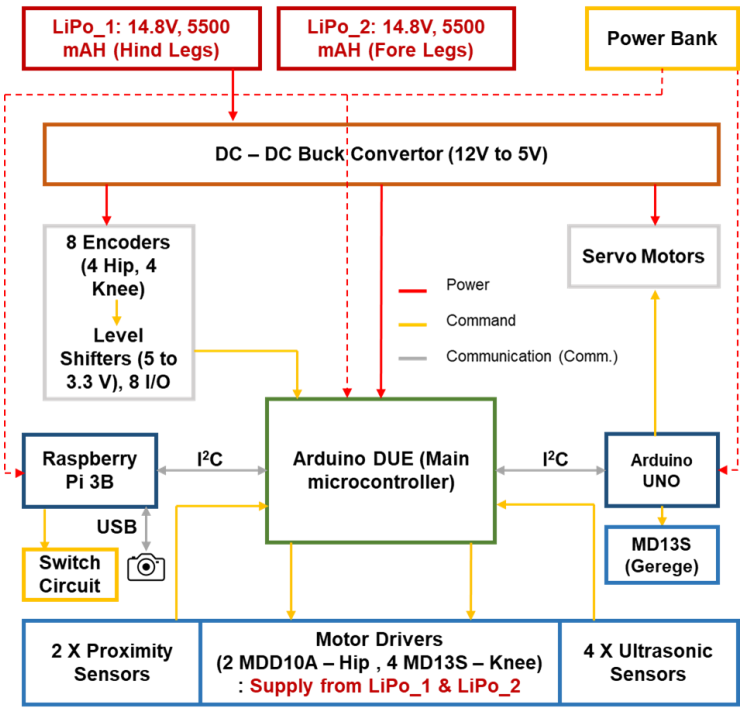

Current Status of Robots (19/02/2019)

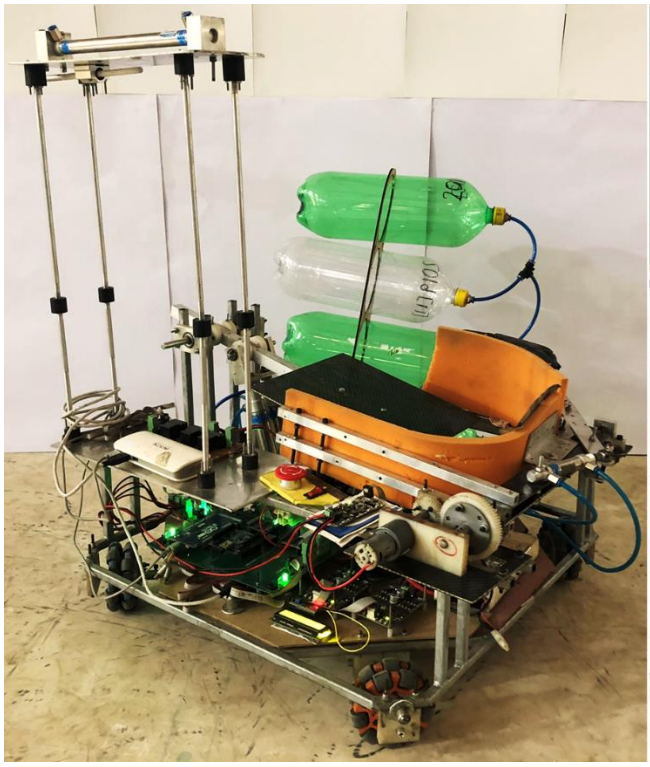

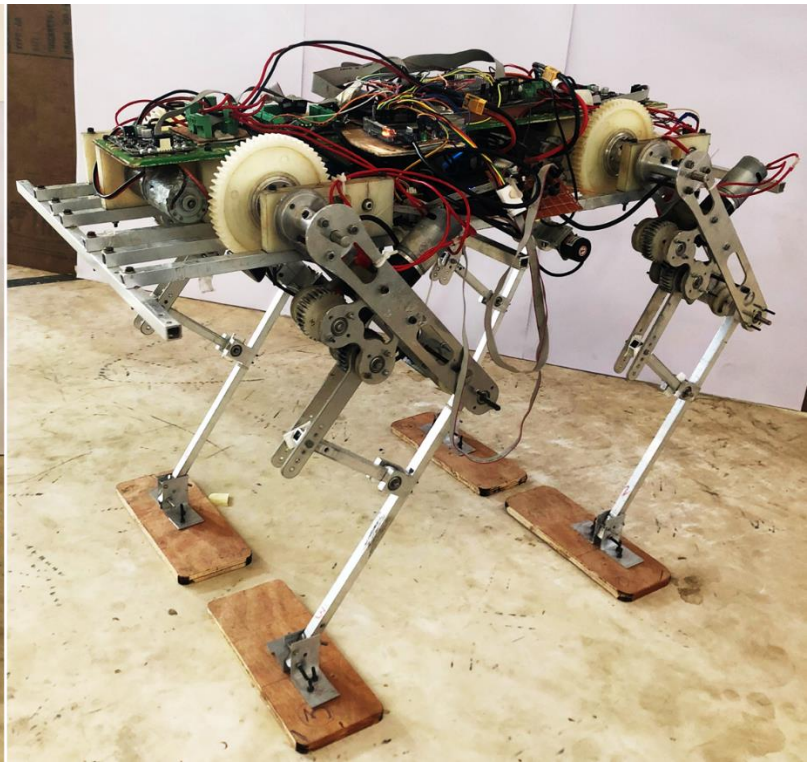

<u>*NOTE:</u> Gerege mechanism on Autonomous Robot has been removed for testing purposes
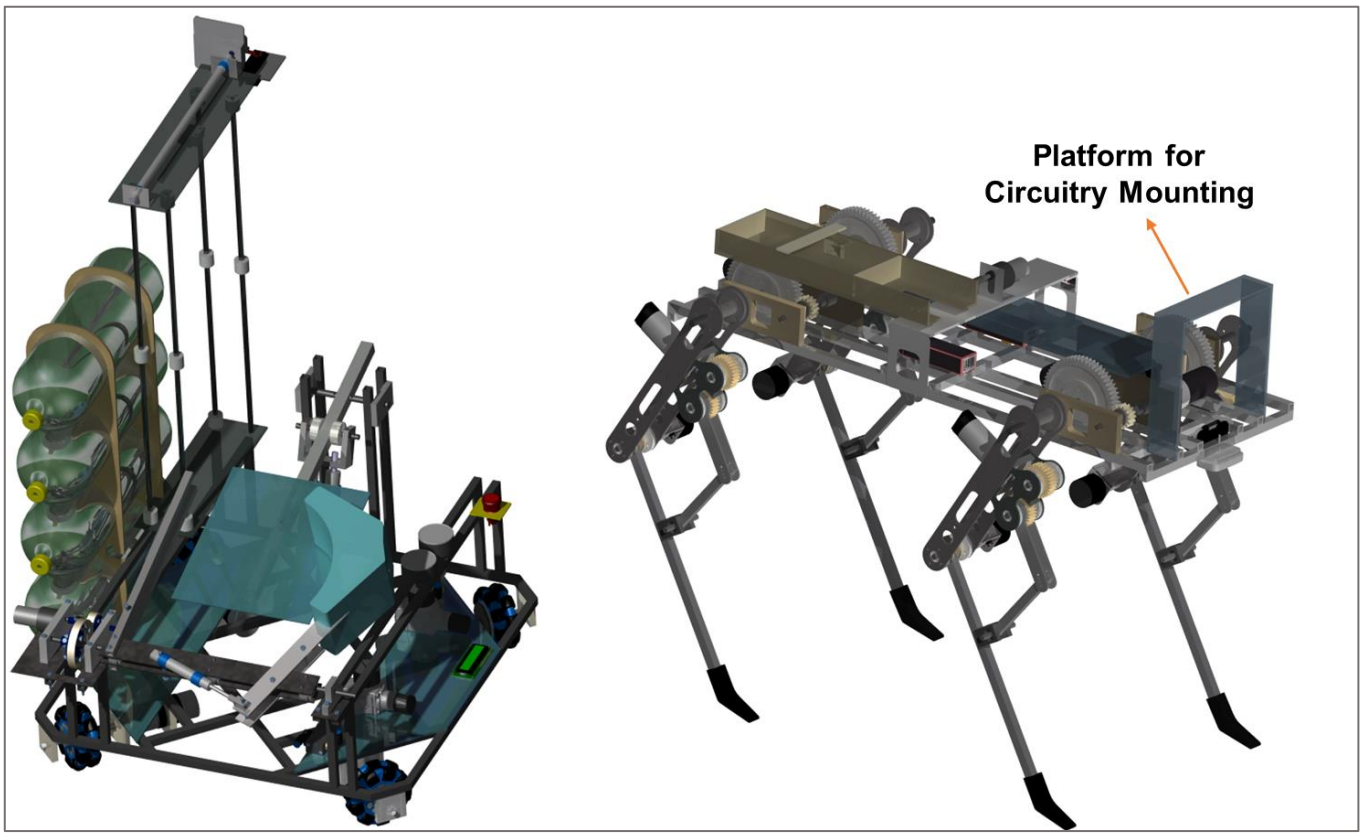
One of the rendered models of Robots (Designing & Rendering on CATIA V5)